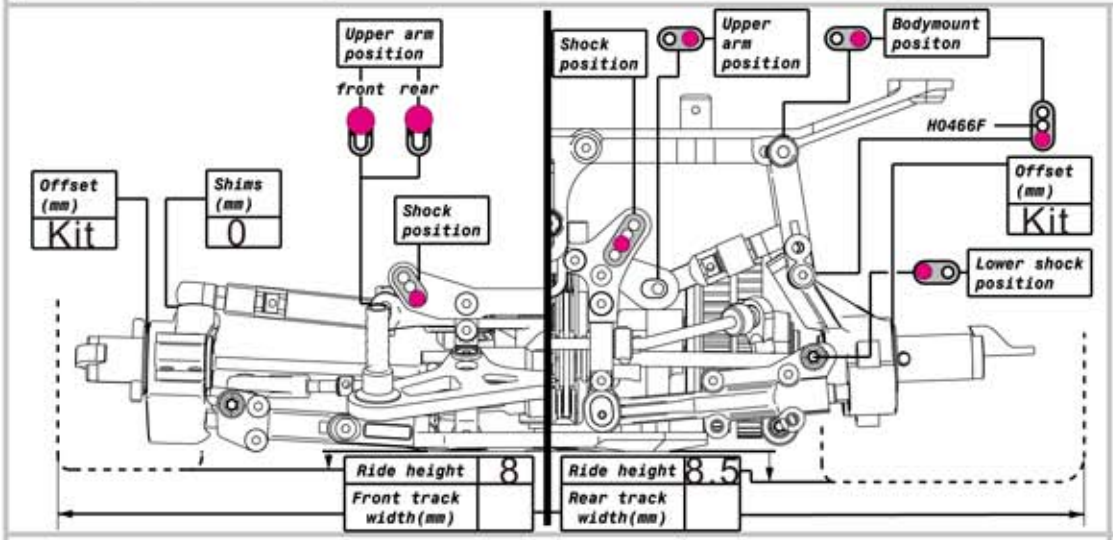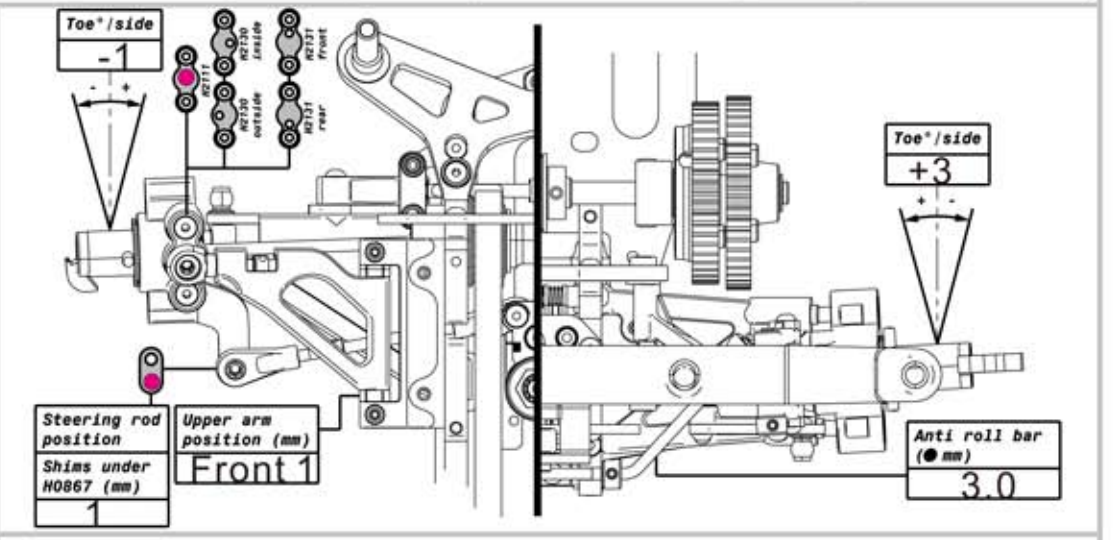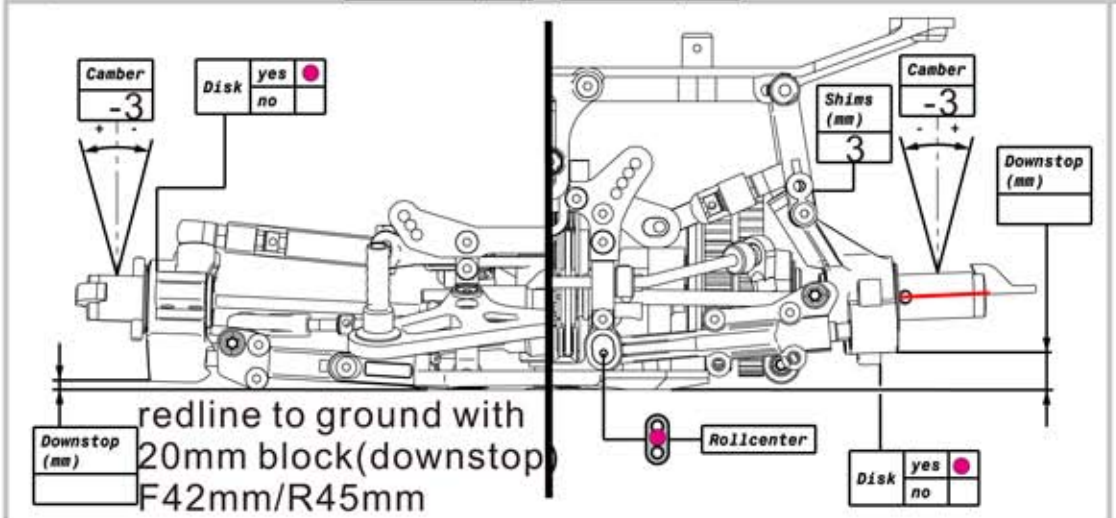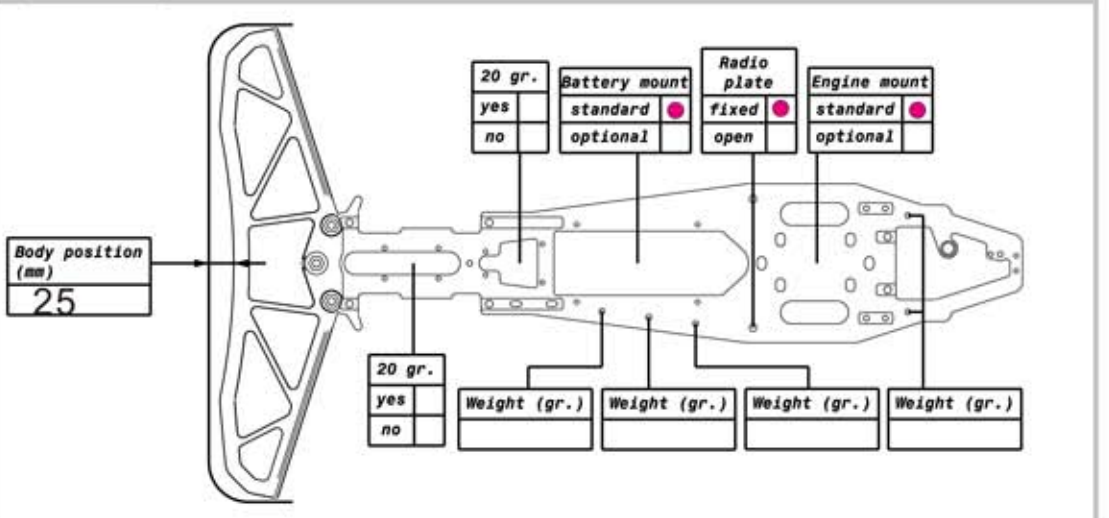MUGEN SEIKI MRX5 setup sheet		Track	Time zone		Clutch settings		Front shocks		Front anti roll bar	Engine	
		Layout	technical ○ mixed ○ fast ●		Shoe	standard ○ optional ●	Piston	1.1*1	WC KIT	Type	VIRTUS
Date	2013-07-21	Traction	low ○ medium ○ high ●		Bell clearance (mm)		Oil	600		Plug	
		Temperature	air: 25	track:	Spring		Spring	White	Servosaver position	Manifold	Novarossi
Driver	JJ Wang	Pinion	1st: 16	2nd: 20	Bell axial play (mm)		Rear shocks		forward ○	Pipe	
		Spur	1st: 49	2nd: 46	Body		Piston	1.1*2		Tires	
Race	Time zone	Pulley	28 ○	29 ●	Type	Pf128	Oil	600		Front	inside 32 outside 67
		Clutch	standard ○	optional ●	Wing position (mm)	5	Spring	GRAY	backward ○	Rear	inside 35 outside 74