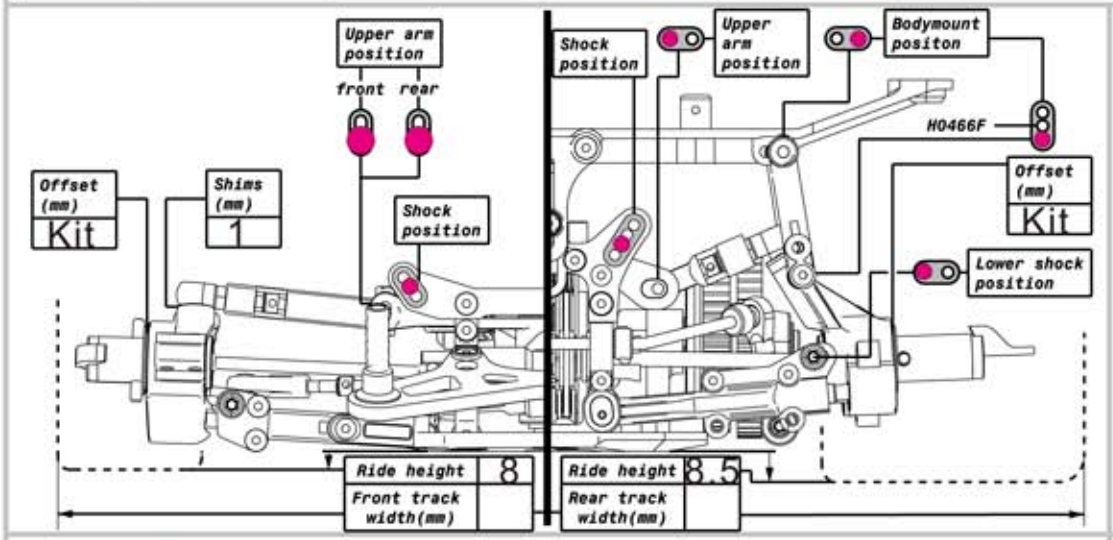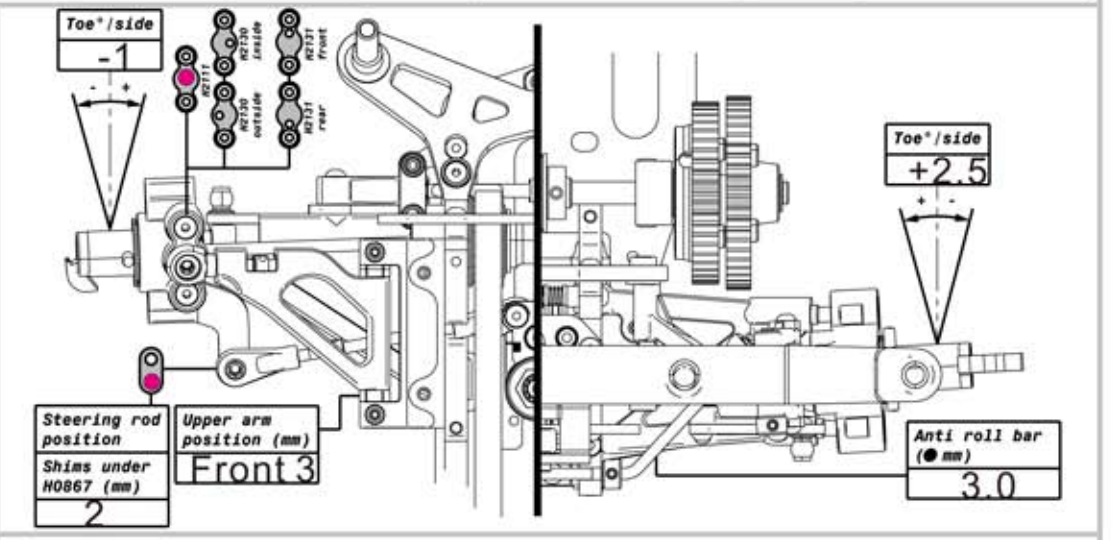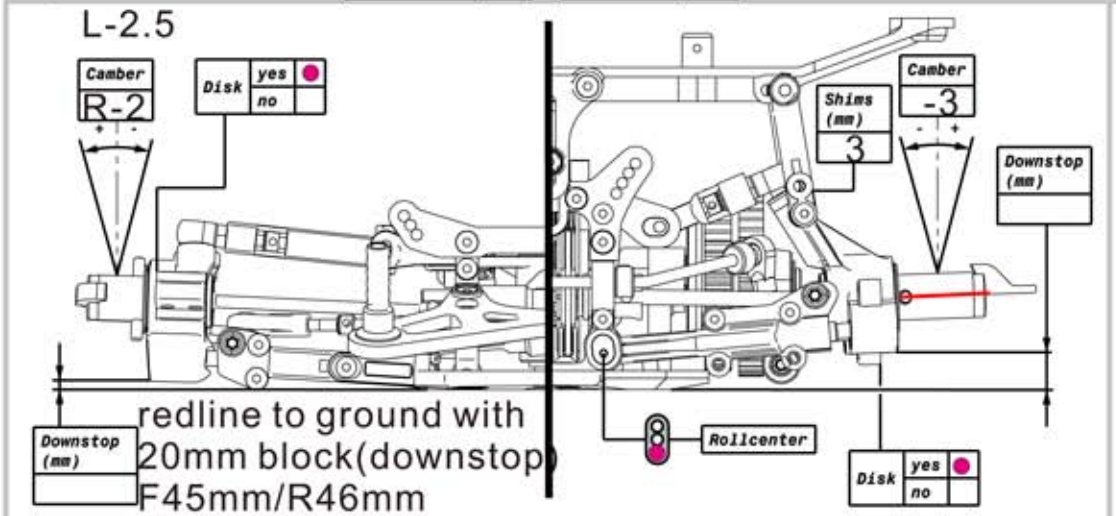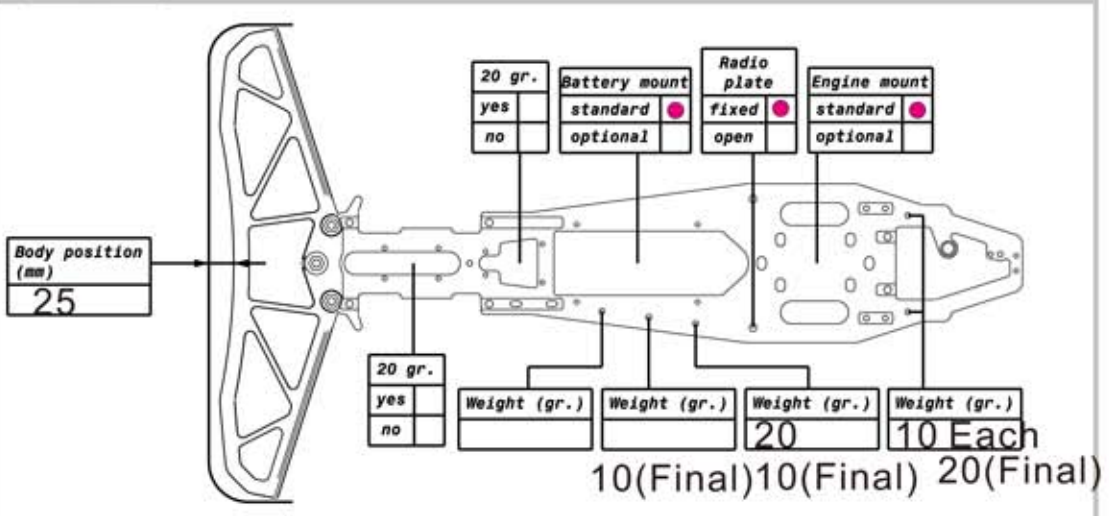MUGEN SEIKI MRX5 setup sheet		Track	Keitune Japan		Clutch settings			Front shocks		Front anti roll bar	Engine .
		Layout	technical ○ mixed ● fast ●		Shoe	standard ○	optional ●	Piston	1.3*1	WC KIT	Type: VIRTUS
Date	2013-05-26	Traction	low ○ medium ● high ○		Bell clearance (mm)			Oil	600		Plug
		Temperature	air:	track: 35	Spring			Spring	GRAY	Servosaver position	Manifold: Novarossi
Driver	JJ Wang	Pinion	1st: 16	2nd: 50	Bell axial play (mm)			Rear shocks		forward ○	Pipe
		Spur	1st: 20	2nd: 45	Body			Piston	1.1*2		Tires
Race	Pre World	Pulley	28 ○	29 ●	Type	Pf18		Oil	600		Front: inside MATRIX outside 69
		Clutch	standard ○	optional ●	Wing position (mm)	5		Spring	GRAY	backward ○	Rear: inside MATRIX outside 75