mugen seiki		Tires		Clutch settings		Front shocks		Engine	
		Front shore	left 40/40 / right 40/40	Shoe	Kit	Piston	1.1*1	Type	KEEP-ON
Date/ Track	2012-11-14	Rear shore	left 42 / right 42	Bell clearance (mm)		Oil	500	Plug/ Fuel	Plug C5TGF / Fuel MAXIMA
Driver	JJ Wang	Front ∅	left 61 / right 60	Spring		Spring	HPI WHITE	Pipe/ Manifold	Pipe NOVA / Manifold 2660
Temp. °C.	air RC / track ADDICT	Rear ∅	left 63 / right 62	Bell axial play (mm)		Rear shocks		Gear ratio chart	
Track layout/ traction	technical ○ low ○ mixed ● medium ○ fast ● high ●	Differential		Gearing		Piston	1.1*2		
		Front diff. oil cst.	RIDE 70# Putty	1st gear	15 / 53	Oil	600		
		Rear diff. oil cst.	80000	2n gear	20 / 48	Spring	RIDE BLACK		

Pinion \ Spur		1st 52	1st 53	1st 54	2nd 47	2nd 48	2nd 49
1st	14	7,614	7,761	7,907			
	15	7,107	7,243	7,38			
2nd	19				5,071	5,179	5,278
	20				4,818	4,92	5,023
	21				4,588	4,686	4,783

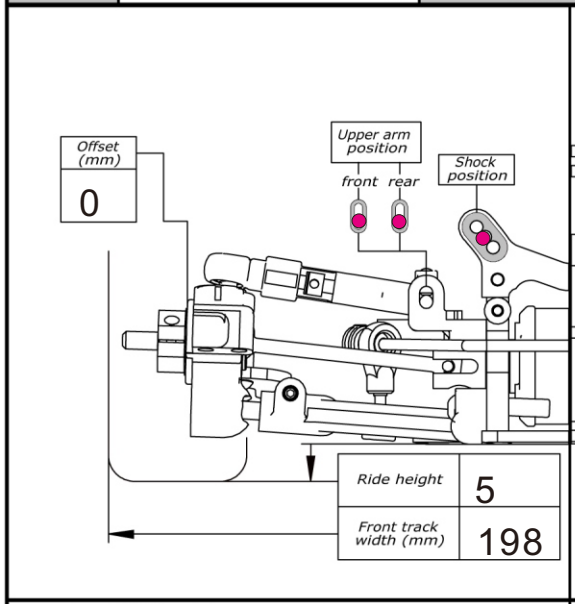

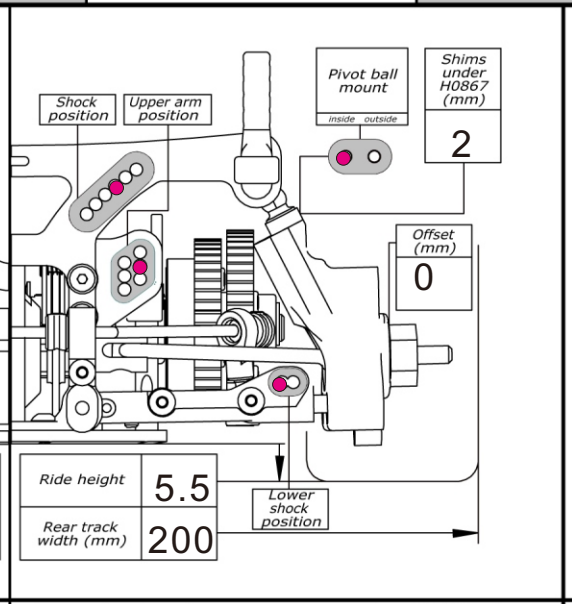

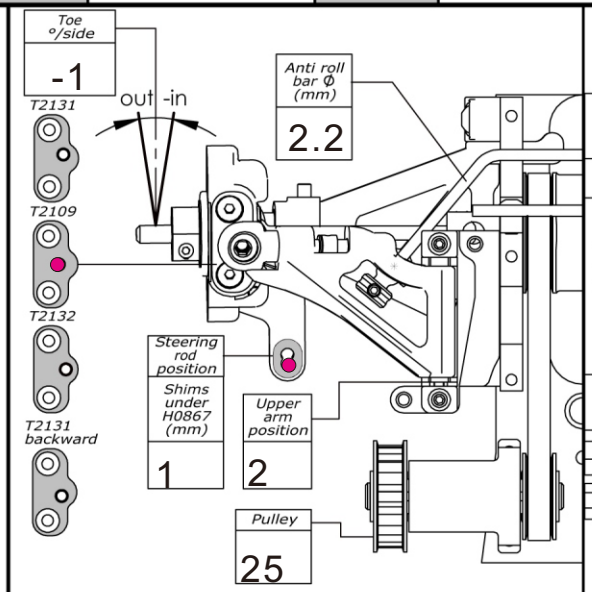

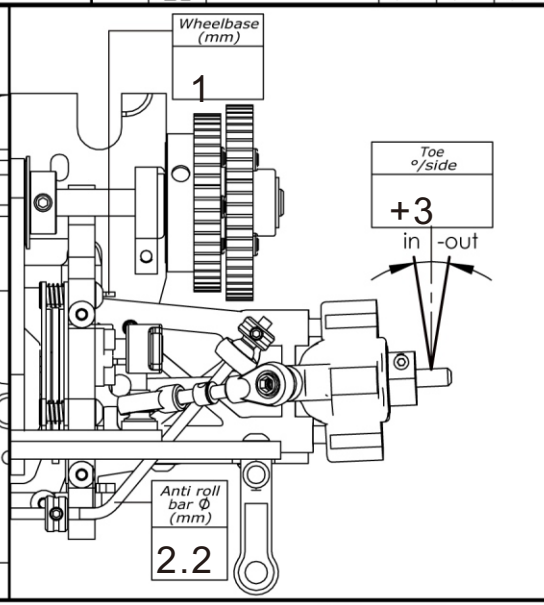

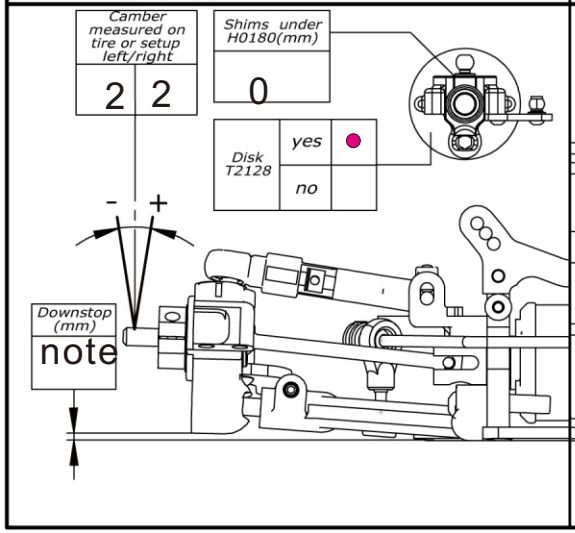

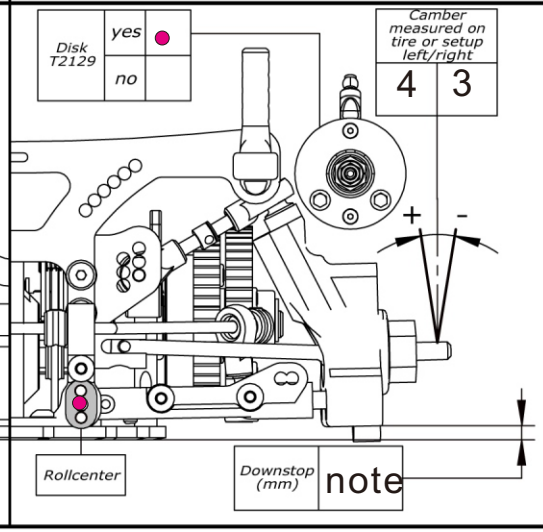

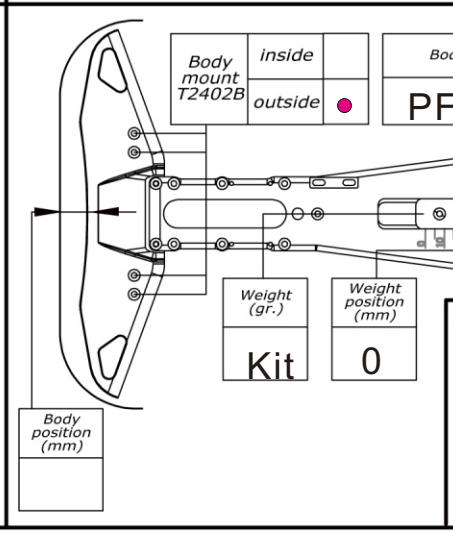

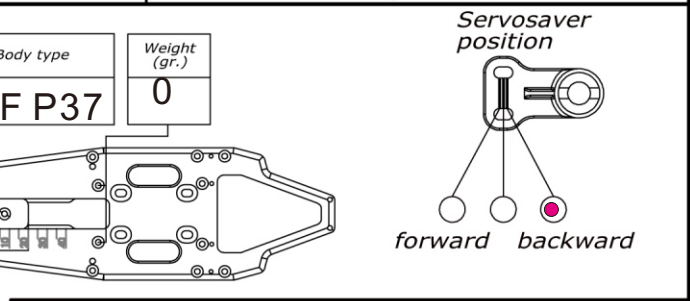

Note:

down stop: cvd shaft center
F33/R32mm with 10mm block